INSTALLATION FOR STUDYING THE INTERACTION OF PLASMA WITH MATERIALS BASED ON A HELICON-TYPE RF SOURCE: FIRST RESULTS

N.O. Stepanov, D.I. Cherkez, S.S. Ananiev, A.V. Spitsyn
NRC "Kurchatov Institute"
Stepanov_NO@nrcki.ru

ABSTRACT

One of the priority tasks in the design of fusion reactors of the next generations is the study of the interaction of plasma with materials of the first wall. For applied research on the interaction of hydrogen plasma with the surface, the most interesting are high-flux plasma generators that simulate the plasma flows of existing and under construction fusion reactors that meet a number of requirements, such as high plasma density and uniformity, the absence of impurities and the ability to operate in a stationary mode.

However, there are a number of problems that do not require such high plasma flows, these include: the study of various aspects of the sputtering of fusion reactor materials, surface modification and plasma-assisted accumulation of hydrogen isotopes. To conduct such studies, a laboratory plasma source is needed that can operate in a stationary mode and with a wide range of control of a plasma flow of a known composition, in the absence of undesirable impurities in it. This paper presents the results of the first experiments to determine the plasma parameters in the GPI-2 facility. The measurements were carried out using a double Langmuir probe.

1. EXPERIMENT INSTALLATION "GPI-2".

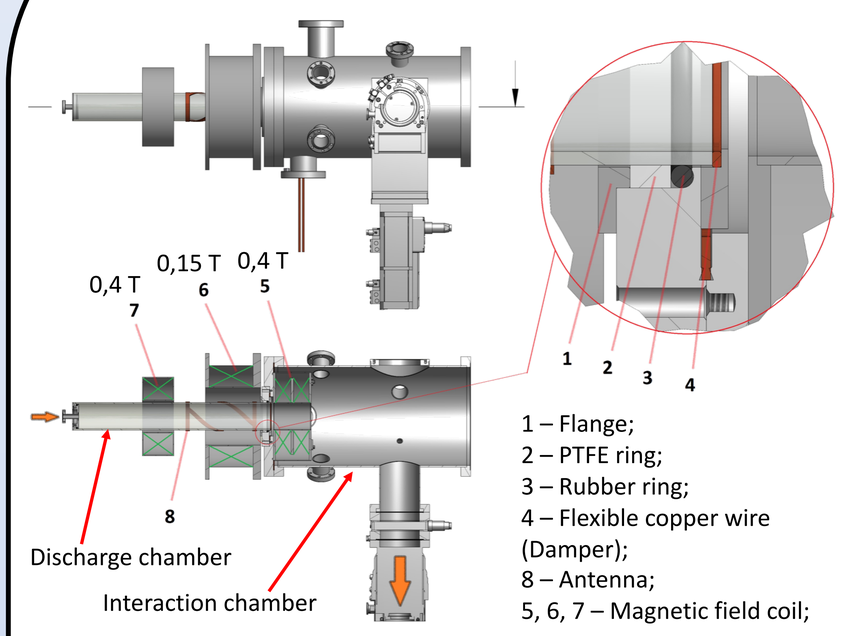

1 – Flange;
2 – PTFE ring;
3 – Rubber ring;
4 – Flexible copper wire (Damper);
8 – Antenna;
5, 6, 7 – Magnetic field coil;

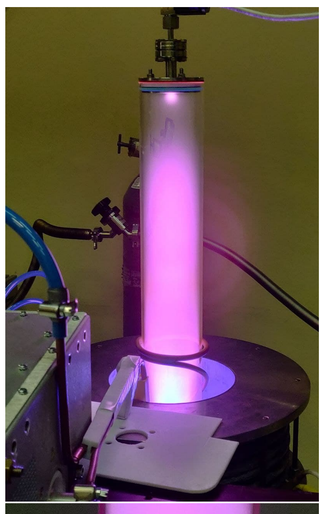

Water-cooled helical antenna

RF generator GL-13.2-7A:
- Maximum output power – 2 kW;
- Frequency – 13,56 MHz;
- Permissible reflected power – 15%;

Navio Match Network 3155405-300. Possible to work with RF generators up to 5 kW power.

2. PROBE DIAGNOSTIC.

Probe geometry:
- Tip diameter, d – 0,79 mm;
- Distance between tips, a – 1,3 mm;
- Tip length, h – 7,7 mm;
- Holder length, L – 162,2 mm;

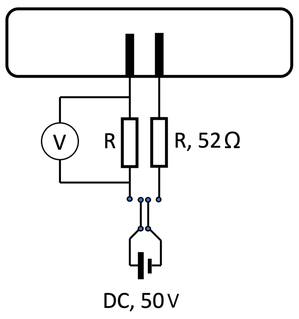

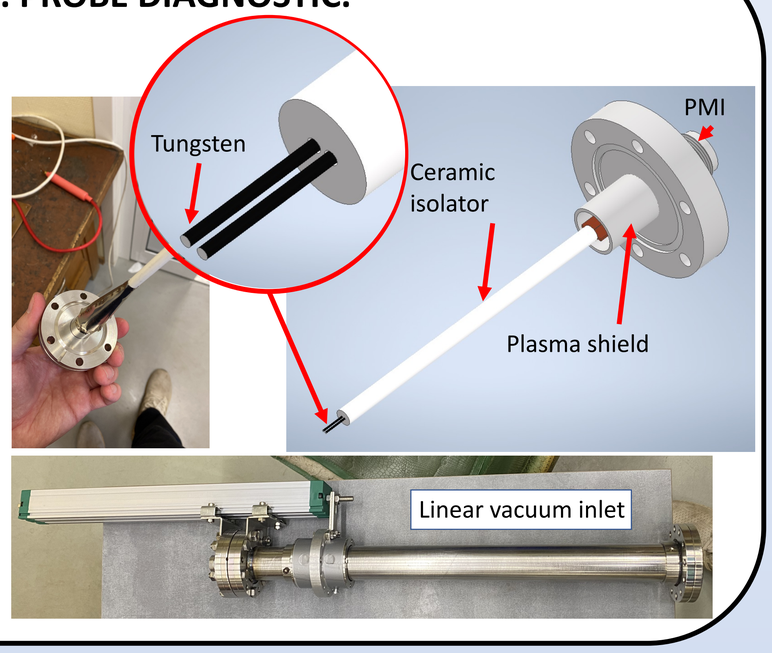

3. I-V ANALYSIS METHOD.

Experimental data — Approximation

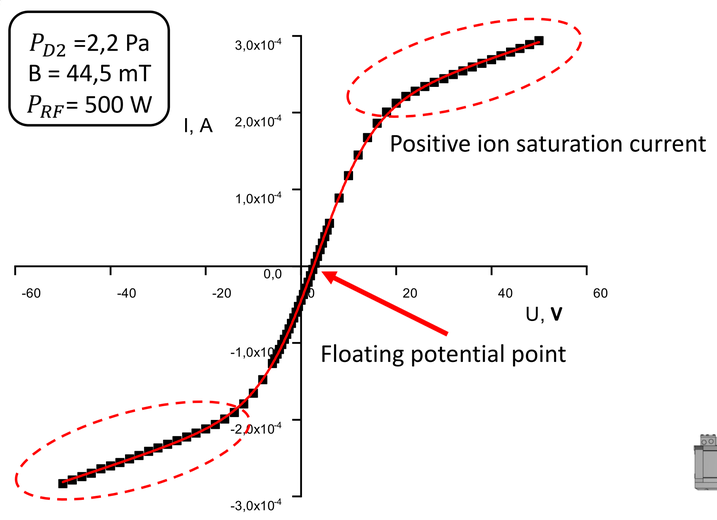

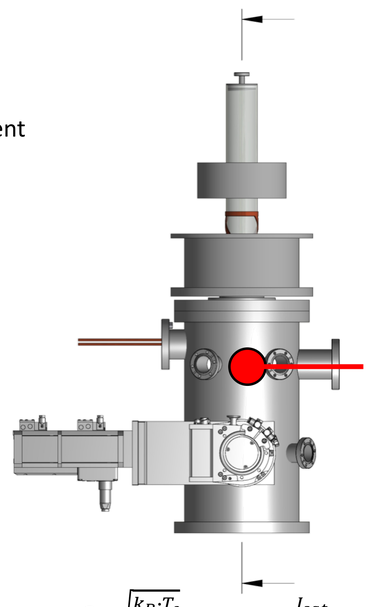

Negative ion saturation current

Symmetric double probe:

$$I(V) = I_{sat} \cdot \tanh\left(\frac{V}{2 \cdot T_e}\right) \xrightarrow{\text{Bohm approximation}} I_{sat} = 0{,}61 \cdot n_e \cdot e \cdot S \cdot \sqrt{\frac{k_B \cdot T_e}{M_i}} \rightarrow n_e = \frac{I_{sat}}{0{,}61 \cdot e \cdot S} \cdot \sqrt{\frac{M_i}{k_B \cdot T_e}},$$

Asymmetric double probe

$$I(V) = A_1 \cdot J_1^{max} \cdot \left[\coth\left(\frac{V_{bias} - \Delta U}{2T_e}\right) + \frac{\left(\frac{A_1}{A_2} - 1\right) \cdot e^{-(V_{bias} - \Delta U)/2T_e}}{2\sinh\left(\frac{V_{bias} - \Delta U}{2T_e}\right)}\right]^{-1} + B1 \cdot V_{bias} + B2$$

J_1^{max} – Specific ion saturation current, A;
V_{bias} – Bias voltage, V;
T_e – Electron temperature;
B1 – Sheath expansion;
B2 – Bias current, A;
A_1 – Large tip area, m²;
A_2 – Area of the smaller tip, m²;
ΔU – Space potential difference, V;

n_e – Electron density, m⁻³;
e – Electron charge, C;
S – Tip area, m²;
M_i – Ion mass, kg;
k_B – Boltzmann's constant, J/K;
I_{sat} - Ion saturation current, A;
V – Bias voltage, V;

4. PLASMA PARAMETERS.

1. Determination of discharge parameters with maximum ion current. Single Langmuir probe. The helicon antenna is in the "zero" position.

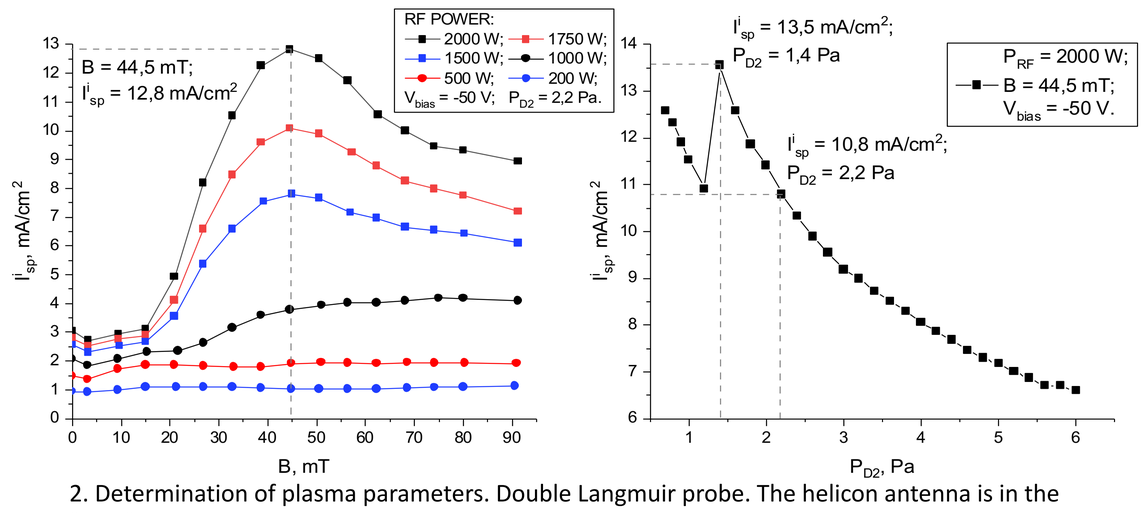

2. Determination of plasma parameters. Double Langmuir probe. The helicon antenna is in the "zero" position.

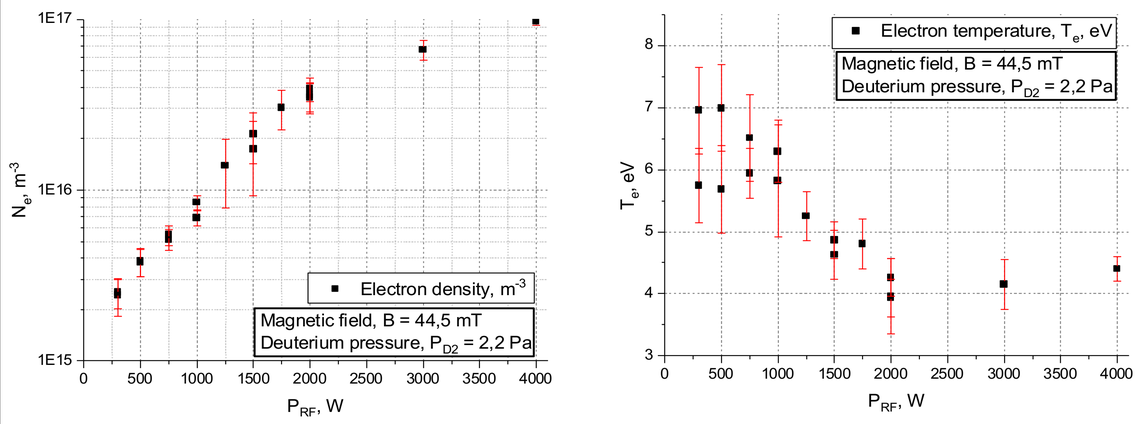

3. Determination of plasma parameters. Double Langmuir probe. The helicon antenna is raised 13.35 cm.

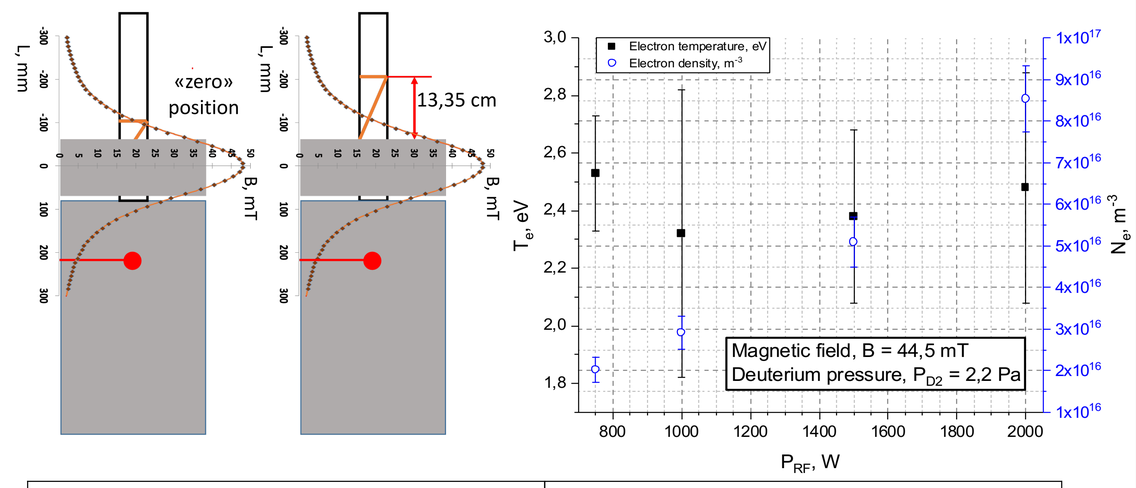

«Zero» position				«Zero» position			
P_{RF}, W	T_e, eV	N_e, 10^{15} m⁻³	I^i_{sp}, mA/cm²; V_{bias} =-50V	P_{RF}, W	T_e, eV	N_e, 10^{15} m⁻³	I^i_{sp}, mA/cm²; V_{bias}= -50V
300	**5,7** ± 0,2	**2,5** ± 0,5	**0,8**	**300**	**6,9** ± 0,7	**2,4** ± 0,6	**0,9**
500	**5,7** ± 0,3	**3,8** ± 0,7	**1,1**	**500**	**7** ± 0,7	**3,8** ± 0,7	**1,3**
750	**5,9** ± 0,4	**5,1** ± 0,7	**1,5**	**750**	**6,5** ± 0,7	**5,5** ± 0,7	**1,7**
1000	**5,8** ± 0,9	**6,9** ± 0,7	**2**	**1000**	**6,3** ± 0,5	**8,5** ± 0,8	**2,4**
1250	**5,3** ± 0,4	**13,9** ± 0,6	**3,4**	**2000**	**3,9** ± 0,6	**39,1** ± 0,6	**9,5**
1500	**4,6** ± 0,4	**17,3** ± 0,8	**4,4**	**13,35 cm**			
1500	**4,9** ± 0,3	**21,3** ± 0,7	**5,2**	**750**	**2,5** ± 0,2	**20,3** ± 0,3	**3,2**
1750	**4,8** ± 0,4	**30,4** ± 0,8	**7,5**	**1000**	**2,3** ± 0,5	**29,1** ± 0,4	**4,6**
2000	**3,9** ± 0,3	**35,8** ± 0,7	**8,3**	**1500**	**2,4** ± 0,3	**50,9** ± 0,6	**7,9**
2000	**4,2** ± 0,3	**35** ± 0,7	**8**	**2000**	**2,5** ± 0,4	**85,3** ± 0,8	**12,6**
3000	**4,2** ± 0,4	**66,3** ± 0,9	**16,9**				
4000	**4,4** ± 0,2	**96,8** ± 0,5	**25,5**				

CONCLUSION

In the course of the first experiments on the GPI-2 experimental facility, a number of plasma parameters were determined using a double Langmuir probe. Thus, the electron temperature decreases ~7 eV, the electron concentration decreases ~9.7*10¹⁶ m⁻³, the ion current is ~25.9 mA/cm². At the moment, the modernization of the experimental stand has begun.